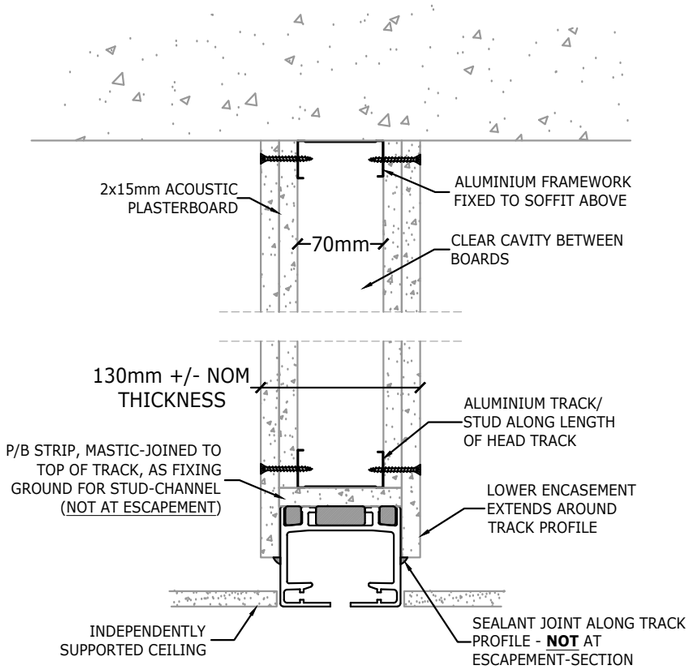

50db HARDCOVER BAFFLE
(2x 15mm SOUNDSHIELD EITHER SIDE OF 70mm C-STUD @ 600mm NOM CENTRES WITH CLEAR VOID)

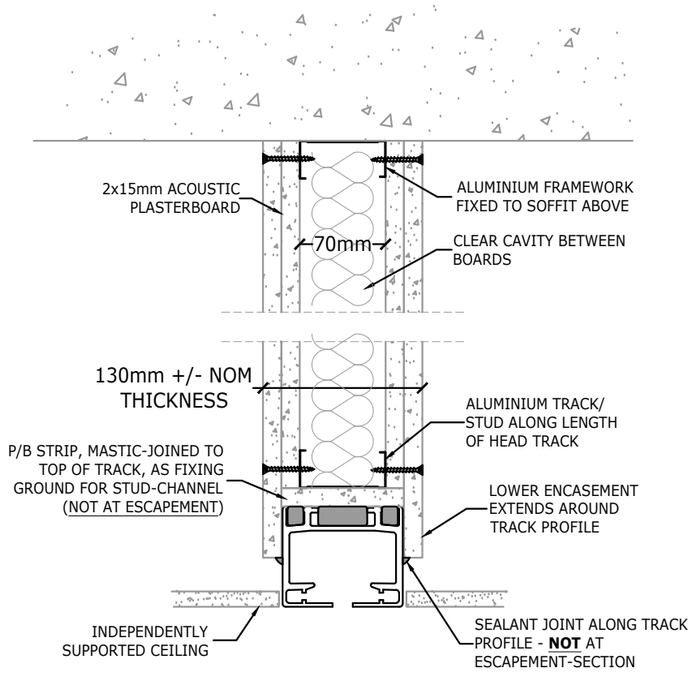

55db HARDCOVER BAFFLE
(2x 15mm SOUNDSHIELD EITHER SIDE OF 70mm C-STUD @ 600mm NOM CENTRES C/W 50mm ACOUSTIC ROLL INFILL)

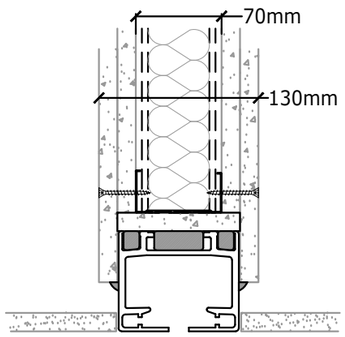

58dB HARDCOVER BAFFLE
(2x 15mm SOUNDSHIELD EITHER SIDE OF 50/60mm STAGGERED I-STUDS @ 300mm CENTRES c/w 50mm ACOUSTIC ROLL INFILL)

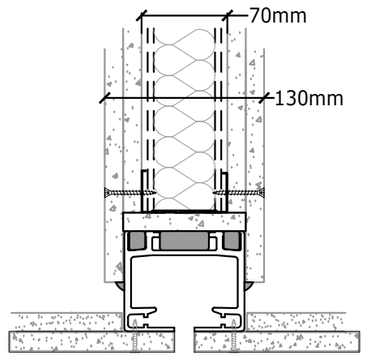

60dB HARDCOVER BAFFLE
(2x 15mm SOUNDSHIELD EITHER SIDE OF 50/60mm STAGGERED I-STUDS @ 300mm CENTRES c/w 50mm ACOUSTIC ROLL INFILL & 17mm CASING BENEATH TRACK)

NOTES:
1. PLEASE REFER TO STY-SD-02 SERIES DRAWINGS FOR VARIOUS TRACK FIXING METHODS
PLEASE SEE OUR WEBSITE FOR FURTHER DETAILS - www.style-partitions.co.uk

TITLE: ACOUSTIC BARRIER DETAILS - TYPE R TRACK			style moveable partition specialist
DWG No: STY-SD-01-04	DATE: 27.04.2012	REV: B	